GEX

20/25/30/35

ELECTRIC 80 VOLT
PNEUMATIC OR SUPERELASTIC TYRES
2000 / 2500 / 3000 / 3500kg

CLARK®
THE FORKLIFT

420 mm

- The low step height means frequent entry and exit is easy and less tiring for the operator.
- **Superelastic tyres provide a soft ride and allow for indoor/outdoor operation.**

Highly Maneuverable, Easily Serviceable, Broadly Flexible, Extremely Dependable

Wet and uneven floors, and tight working environments are not a problem for the GEX20-35, just enjoy the exceptional performance and maneuverability. Various options ensures that you will always have the right truck for your working conditions.

80 Volt

The 80 volt high performance drive and lift systems allow the GEX to rival internal combustion truck performance in speed, acceleration and gradeability.

- Driving with remarkable acceleration, gradeability, and stability is always available with GEX dual drive motors. Each motors' speed and direction is proportionally regulated by steer tyre position. A sharp-turn steer axle enables 101% perfect turning radius.

Smooth Control + Easy Operation = **Operator Confidence** & **Optimum Comfort**

- Hydraulic levers are conveniently mounted on the hood beside the operator for comfortable, effortless access.

Products may be shown with optional equipment.

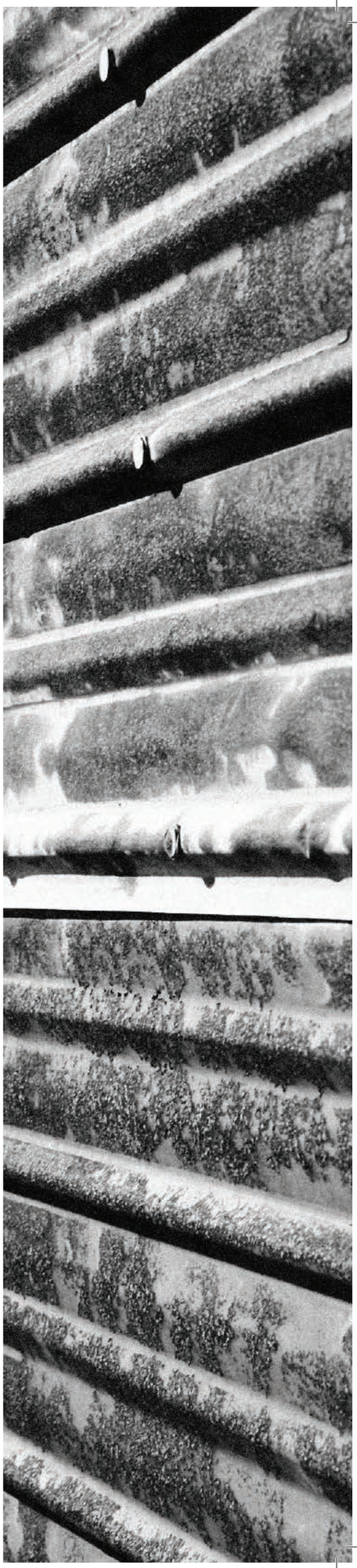

GEX STANDARD FEATURES & BENEFITS

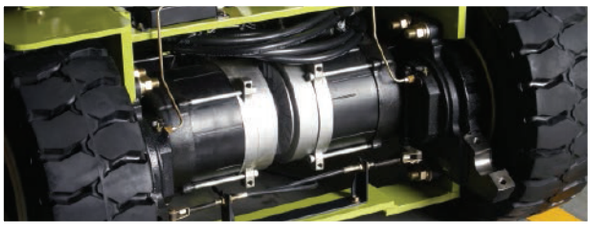

HEAVY DUTY AC DRIVE MOTORS

- **Fewer Parts & Minimum Wear = Less Downtime and Cost = Higher Return on Investment**
- Enclosed • Brushless • Thermal protection
- Stall protection • Suitable for wet applications
- Dual/powered reversing for tight turns

REGENERATIVE & WET DISC BRAKES

- **Three Forms of Regenerative Braking**
  - Accelerator release. (Proportional to accelerator position)
  - Change of direction. (Proportional to accelerator position)
  - Service brake. (Foot Brake)
- **Wet Disc Brakes**
  - Enclosed and oil cooled for smooth, quiet operation.
  - Built with long life lining material.
  - Less downtime.

80 VOLT 100% AC SYSTEM

- **High Performance**
  - Rival IC truck performance in speed, acceleration and gradeability.
- **More Efficient System**
  - Higher Voltage = Lower cable Loss & Heating = Greater Efficiency
- **Auto Shut-Down**
  - Protects your investment. The motor temperature is always monitored, in case of overheating the motors performance will automatically be reduced.
- **Better Suited to Fast/Rapid Charge**
  - GEX 20/25 can accommodate 54 kwh battery.
  - GEX 30/35 can accommodate 60 kwh battery.

Standard Equipment	Optional Equipment
• 80 Volt	• Sideshifters
• Wet Disc Brakes	• Pneumatic Tyres
• Single Aux Valve	• Double Aux Valves
• Tilt Steer Column	• Hi-Lo and Triplex uprights
• Zero Turn Steer Axle	• Non-Marking Drive Tyres
• Regenerative Braking	• Cold Storage with Heaters
• Superelastic Tyres	• Lights and Backup Alarm
• Hood Mounted Levers	• Cloth Full Suspension Seat
• Vinyl Full Suspension Seat	• Mini-Lever
• Hydrostatic Power Steering	• Mini-Joystick
• Power Reversing Drive Motors	• Various Cab-Versions
• OHG Mounted 12 Volt Head Lights	• Side battery removal
• Programmable, Colour Dash Display	• Fork positioner
• 100% AC (drive and pump control)	
• Turn signal lamp (front)	
• Combination lamp (back)	

EASILY SERVICED

- The rear control cover is hinged and supported by gas struts for easy service access from a standing position. On board diagnostics allow servicing mechanic to check fault codes via display without service tool.

RUGGED UPRIGHT AND CARRIAGE

- **Hydraulic Cushioning Valves**
  - Silent Staging Reduces Shock & Vibration.
- **Anti-Rattle Upright**
  - Shims added to reduce rattle when forks are lowered.
  - Robust and warp resistant design
  - Smooth transitions between the upright stages
  - Wide vision window
  - Nested & interlocked cold rolled rails for strength & stability
  - Canted/angled totally sealed roller bearings - friction free
  - 6- Canted carriage rollers are standard

STABLE PLATFORM

- **Low center of gravity**
  - low positioning of battery between the axles gives a low center of gravity for optimum stability.
- **Speed control when cornering**
  - Reduces truck travel speed in turns.

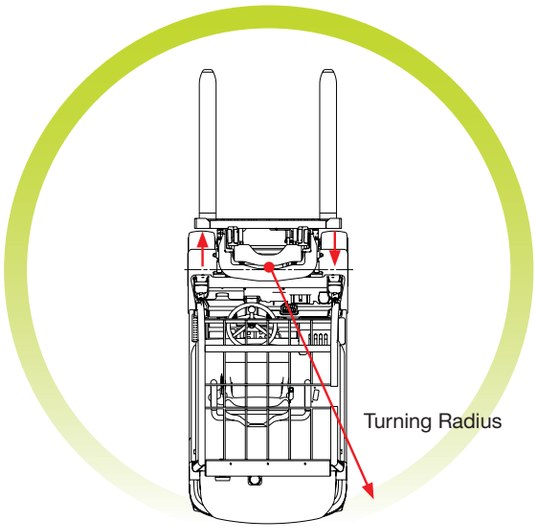

POWERED REVERSING DRIVE MOTORS & ZERO TURN STEER AXLE

- **Pivot Point Between Drive Tyres**
  - Zero turn steer axle provides the tightest possible turning radius.
- **Twin motor drive**
  - Provides added traction, especially on wet or uneven surfaces.
- **Anti scuff protection**
  - Inside wheel power reverses in tight turn preventing scuffing of steer tyres like conventional 4-wheel trucks.
- **Steer Sensor**
  - Relays steer tyre position to control.

INTERACTIVE LCD DASH DISPLAY

- **Fully Adjustable/Programmable**
  - The operator can select from 4 pre-set performance modes.
  - Additional adjustments can be made to maximize performance in certain operations.
- **Alarm codes**
  - Indicates the current alarm code and stores previous alarm codes for quick access.
- **Password Protected**
  - Certain adjustments are password protected to allow only authorized operators to make adjustments.

DIMENSIONS

GEX20/25/30/35

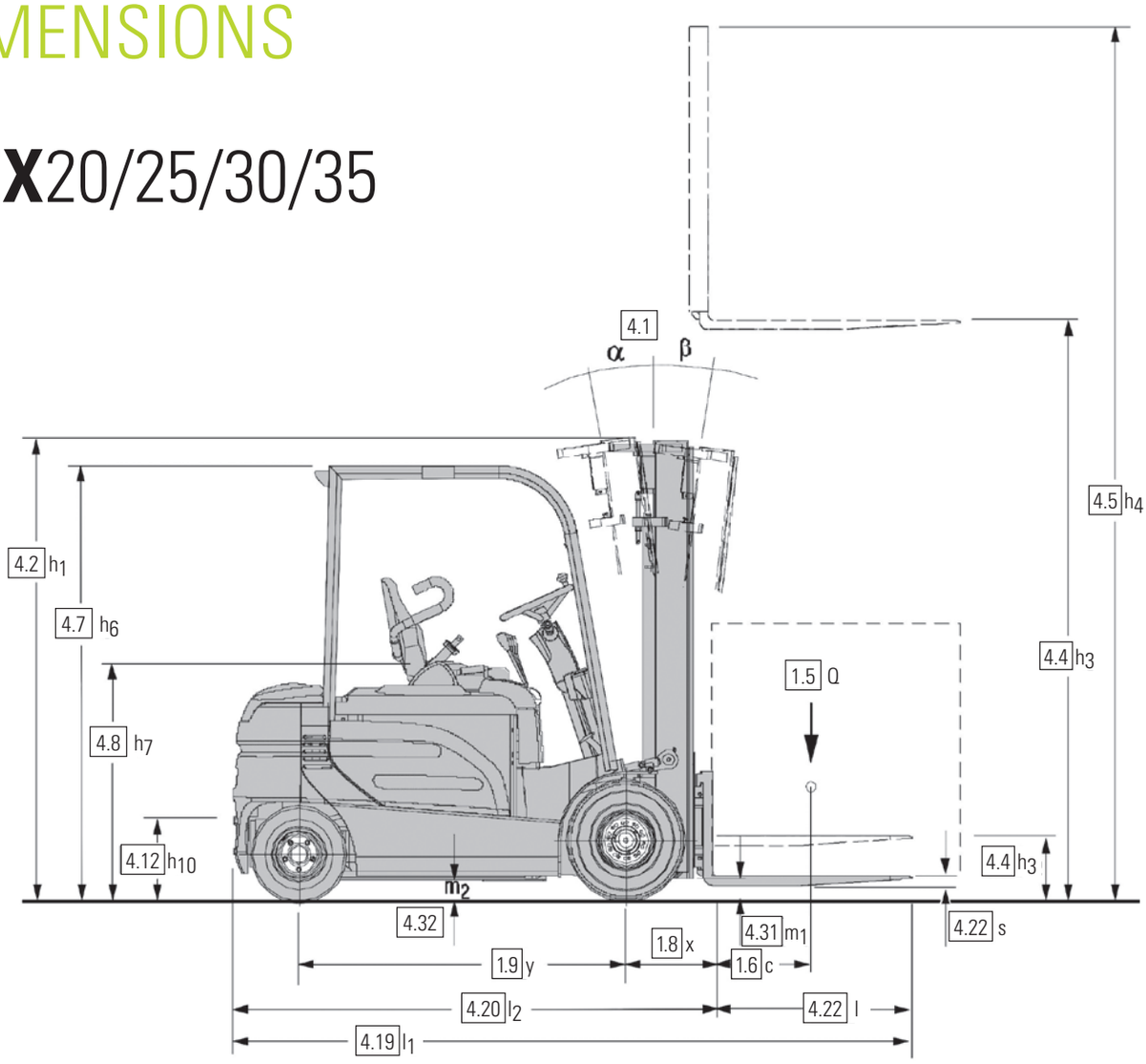

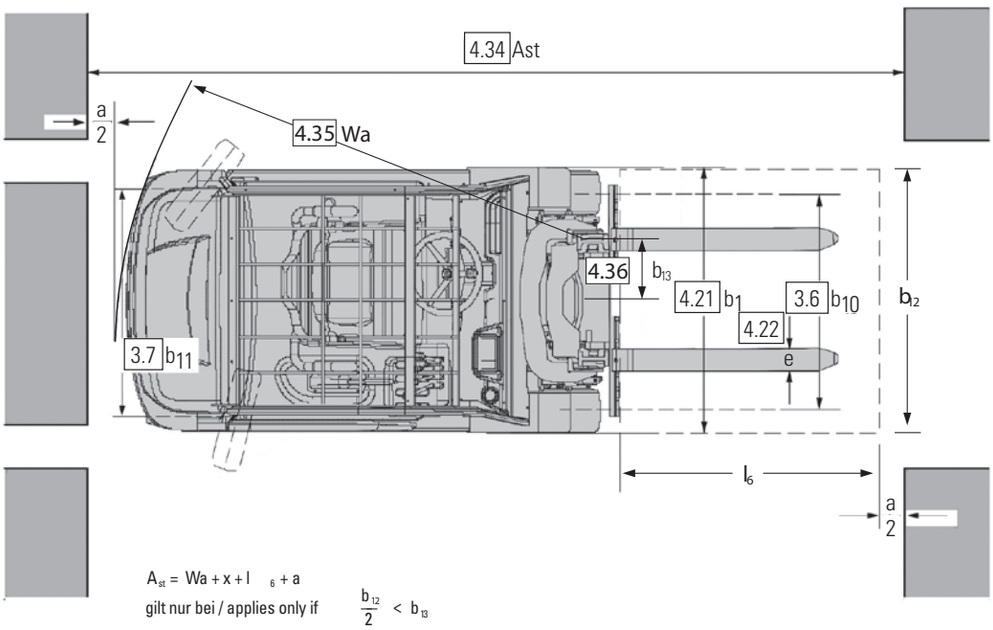

$A_{st} = Wa + x + l_6 + a$

gilt nur bei / applies only if $\frac{b_{12}}{2} < b_{13}$

$A_{st} = Wa + \sqrt{(l_6 + x)^2 + \left(\frac{b_{12}}{2} - b_{13}\right)^2} + a$

gilt nur bei / applies only if $\frac{b_{12}}{2} \geq b_{13}$

a = 200

For corresponding data see Specification Chart.

GENERAL DATA

Truck Capacities Capacity at different load centres

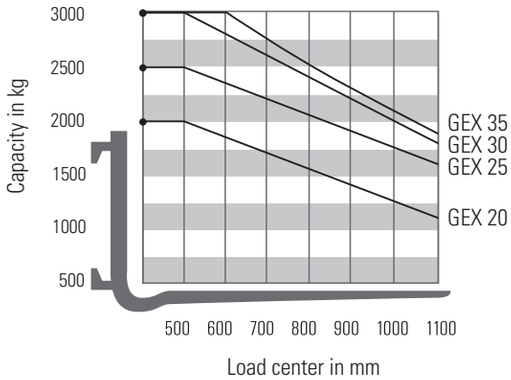

Note:

The listed capacities are valid only for the standard upright in vertical position with standard fork carriage and standard forks, up to max. lifting height of 3085 mm. The centre of gravity of the load may be displaced by max. 100 mm against the longitudinal centre plane of the truck. Load centre is determined from top and front face of the forks. The values are based on a 1000 mm cube load configu-ration with the centre of gravity at the true centre of the cube With upright tilted forward lower capacity values are valid. Attachments, longer forks, exceptional load dimensions and higher lifting heights can reduce the capacity. Please talk to your CLARK dealer if you require further information.

Upright table GEX 35

Mast type	Maximum Fork Height (h3)	Mast Lowered (h1)	Mast Extended (h4)		Free Lift (h2)	
			with load backrest	without load backrest	with load backrest	without load backrest
	mm	mm	mm	mm	mm	mm
Standard	2015	1575	3234	2676	115	115
	2575	1855	3794	3236		
	2875	2005	4094	3536		
	3195	2165	4414	3856		
	3725	2455	4944	4386		
	3860	2530	5079	4521		
	4165	2800	5384	4826		
	4380	3000	5599	5041		
	4620	3230	5839	5281		
	5170	3495	6389	5831		
Triple	3860	1855	5079	4544	636	1172
	4320	2005	5539	5004	786	1322
	4800	2165	6019	5484	946	1482
	5210	2305	6429	5894	1086	1622
	5520	2455	6739	6204	1236	1772
	5740	2530	6959	6424	1311	1847
	6100	2690	7319	6784	1471	2007
	6370	2800	7589	7054	1581	2117
	6830	3000	8049	7514	1781	2317
	7315	3230	8534	7999	2011	2547

Upright table GEX 20/25

Mast type	Maximum Fork Height (h3)	Mast Lowered (h1)	Mast Extended (h4)		Free Lift (h2)	
			with load backrest	without load backrest	with load backrest	without load backrest
	mm	mm	mm	mm	mm	mm
Standard	2015	1575	3234	2612	110	110
	2575	1855	3794	3172		
	2875	2005	4094	3472		
	3195	2165	4414	3792		
	3725	2455	4944	4322		
	3860	2530	5079	4457		
	4165	2800	5384	4762		
	4380	3000	5599	4977		
	4620	3230	5839	5217		
	5170	3495	6389	5767		
Triple	3860	1855	5079	4483	636	1232
	4320	2005	5539	4943	786	1382
	4800	2165	6019	5423	946	1542
	5210	2305	6429	5833	1086	1682
	5520	2455	6739	6143	1236	1832
	5740	2530	6959	6363	1311	1907
	6100	2690	7319	6723	1471	2067
	6370	2800	7589	6993	1581	2177
	6830	3000	8049	7453	1781	2377
	7315	3230	8534	7938	2011	2607
	7800	3395	9019	8423	2176	2772
HI-LO	2935	2005	4154	3558	786	1382
	3255	2165	4474	3878	946	1542
	3530	2305	4749	4153	1086	1682
	3760	2455	4979	4383	1236	1832
	3910	2530	5129	4533	1311	1907

Upright table GEX 30

Mast type	Maximum Fork Height (h3)	Mast Lowered (h1)	Mast Extended (h4)		Free Lift (h2)	
			with load backrest	without load backrest	with load backrest	without load backrest
	mm	mm	mm	mm	mm	mm
Standard	2015	1575	3234	2682	110	110
	2575	1855	3794	3242		
	2875	2005	4094	3542		
	3195	2165	4414	3862		
	3725	2455	4944	4392		
	3860	2530	5079	4527		
	4165	2800	5384	4832		
	4380	3000	5599	5047		
	4620	3230	5839	5287		
	5170	3495	6389	5837		
Triple	3860	1855	5079	4549	636	1167
	4320	2005	5539	5009	786	1317
	4800	2165	6019	5489	946	1477
	5210	2305	6429	5899	1086	1617
	5520	2455	6739	6209	1236	1767
	5740	2530	6959	6429	1311	1842
	6100	2690	7319	6789	1471	2002
	6370	2800	7589	7059	1581	2112
	6830	3000	8049	7519	1781	2312
	7315	3230	8534	8004	2011	2542
	7800	3395	9019	8489	2176	2707
HI-LO	2935	2005	4154	3624	786	1317
	3255	2165	4474	3944	946	1477
	3530	2305	4749	4219	1086	1617
	3760	2455	4979	4449	1236	1767
	3910	2530	5129	4599	1311	1842

Performance may vary +5% and -10% due to motor and system efficiency tolerance. The performance shown represents nominal values which may be obtained under typical operating conditions of a machine. CLARK products and specifications are subject to change without notice.

SPECIFICATIONS

Product Specifications acc. to VDI 2198

	1.1 Manufacturer (Abbreviation)		CLARK	CLARK
Specifications	1.2 Manufacturer's designation		GEX20	GEX25
	1.3 Drive unit		Elec -80V	Elec -80V
	1.4 Operator type stand on / driver seated		Rider-seated	Rider-seated
	1.5 Load capacity / rated load	Q (Kg)	2000	2500
	1.6 Load centre distance	c (mm)	500	500
	1.8 Load centre distance, centre of drive axle to fork face	x (mm)	415	415
	1.9 Wheelbase	y (mm)	1610	1610
Weight	2.1 Service weight	kg	4148	4348
	2.2 Axle loading, laden front / rear	kg	5276/872	6107/741
	2.3 Axle loading, unladen front / rear	kg	2139/2009	2186/2161
Tires, Chassis	3.1 Tyre type, SE = superelastic, C = cushion		SE	SE
	3.2 Tyre size, front, superelastic		23x9-10	23x9-10
	3.3 Tyre size, rear, superelastic		18x7-8	18x7-8
	3.5 Wheels, number front/rear (x = drive wheels)		2x/2	2x/2
	3.6 Tread, front SE (C)	b_{10} (mm)	1005	1005
	3.7 Tread, rear	b_{11} (mm)	989	989
Dimensions	4.1 Tilt of upright/fork carriage, a / b	deg	8/8	8/8
	4.2 Height, upright lowered	h_1(mm)	2165	2165
	4.3 Freelift	h_2(mm)	110	110
	4.4 Lift height *1	h_3(mm)	3195	3195
	4.5 Height, upright extended (with load backrest)	h_4(mm)	4414	4414
	4.7 Height overheadguard (Cabin)	h_6(mm)	2148 (2198)	2148 (2198)
	4.8 Seat height	h_7(mm)	1125	1125
	4.12 Coupling height	h_{10}(mm)	420	420
	4.19 Overall length	l_1(mm)	3410	3410
	4.20 Length to face of forks	l_2(mm)	2343	2343
	4.21 Width	b_1. b_2 (mm)	1230	1230
	4.22 Fork dimensions	s • e • l (mm)	45x100x1067	45x100x1067
	4.23 Fork carriage DIN 15173, A, B		II A	II A
	4.24 Fork carriage width	b_3 (mm)	1040	1040
	4.31 Ground clearance minimum, laden	m_1 (mm)	135	135
	4.32 Ground clearance centre of wheelbase	m_2 (mm)	114	114
	4.34 Stacking aisle for pallets (l6 • b12) 1000 x 1200 across	Ast(mm)	3630	3630
	4.34 Stacking aisle for pallets (l6 • b12) 800 x 1200 along	Ast(mm)	3770	3770
	4.35 Turning radius	Wa(mm)	1925	1925
	4.36 Internal turning radius	b_{13} (mm)	86	86
Performance	5.1 Travel speed laden/unladen	km/h	18/18	18/18
	5.2 Lift speed laden/unladen	m/s	0.48/0.54	0.41/0.54
	5.3 Lowering speed laden/unladen	m/s	0.47/0.43	0.47/0.43
	5.6 Max. drawbar pull laden/unladen (S2 5 min) *2	N	20231/10297	20427/10562
	5.8 max. gradeability laden/unladen (S2 5 min) *2	%	35.9/25.3	32.2/24.7
	5.10 Service brake		Wet disc brake	Wet disc brake
Drive line	6.1 Drive motor rating (S2 60 min)	kW	2x7.8	2x7.8
	6.2 Lift motor rating (S3 15%)	kW	19,1	19,1
	6.3 Battery acc. to DIN43531/35/36		DIN 43531A	DIN 43531A
	6.4 Battery voltage, nominal capacity K	V/Ah	80/620	80/620
	6.5 Battery weight (min)	kg	1558	1558
Miscellaneous	8.1 Type of control		AC / Inverter	AC / Inverter
	8.2 Operating pressure for attachments	kg/cm²	140	140
	8.4 Sound level, driver's ear *3	dB (A)	73	73

*1 Further lift heights see upright table
*2 At friction coefficient μ=0.8 with 1.6 km/h
*3 acc. to DIN EN 12053

All values shown are for standard lift truck with standard equipment. If the truck is supplied with options, values may change. All values given may vary +5% and -10% due the motor and system tolerances and represent nominal values obtained under typical operating conditions. Specifications for Non-emission limited truck.

Product Specifications acc. to VDI 2198

	1.1 Manufacturer (Abbreviation)		CLARK	CLARK
Specifications	1.2 Manufacturer's designation		GEX30	GEX35
	1.3 Drive unit		Elec -80V	Elec -80V
	1.4 Operator type stand on / driver seated		Rider-seated	Rider-seated
	1.5 Load capacity / rated load	Q (Kg)	3000	3500
	1.6 Load centre distance	c (mm)	500	500
	1.8 Load centre distance, centre of drive axle to fork face	x (mm)	420	435
	1.9 Wheelbase	y (mm)	1610	1750
Weight	2.1 Service weight	kg	4581	4952
	2.2 Axle loading, laden front / rear	kg	6904/677	7214/738
	2.3 Axle loading, unladen front / rear	kg	2190/2391	2439/2513
Tires, Chassis	3.1 Tyre type, SE = superelastic, C = cushion		SE	SE
	3.2 Tyre size, front, superelastic		23x9-10	23x9-10
	3.3 Tyre size, rear, superelastic		18x7-8	18x7-8
	3.5 Wheels, number front/rear (x = drive wheels)		2x/2	2x/2
	3.6 Tread, front SE (C)	b_{10} (mm)	1005	1005
	3.7 Tread, rear	b_{11} (mm)	989	989
Dimensions	4.1 Tilt of upright/fork carriage, a / b	deg	8/8	8/8
	4.2 Height, upright lowered	h_1(mm)	2165	2165
	4.3 Freelift	h_2(mm)	110	115
	4.4 Lift height *1	h_3(mm)	3195	3195
	4.5 Height, upright extended (with load backrest)	h_4(mm)	4414	4409
	4.7 Height overheadguard (Cabin)	h_6(mm)	2148 (2198)	2148 (2198)
	4.8 Seat height	h_7(mm)	1125	1125
	4.12 Coupling height	h_{10}(mm)	420	420
	4.19 Overall length	l_1(mm)	3415	3562
	4.20 Length to face of forks	l_2(mm)	2348	2495
	4.21 Width	b_1. b_2 (mm)	1230	1230
	4.22 Fork dimensions	s • e • l (mm)	45x122x1067	50x122x1067
	4.23 Fork carriage DIN 15173, A, B		III A	III A
	4.24 Fork carriage width	b_3 (mm)	1040	1040
	4.31 Ground clearance minimum, laden	m_1 (mm)	135	135
	4.32 Ground clearance centre of wheelbase	m_2 (mm)	114	114
	4.34 Stacking aisle for pallets (l6 • b12) 1000 x 1200 across	Ast(mm)	3635	3820
	4.34 Stacking aisle for pallets (l6 • b12) 800 x 1200 along	Ast(mm)	3775	3957
	4.35 Turning radius	Wa(mm)	1925	2087
	4.36 Internal turning radius	b_{13} (mm)	86	61
Performance	5.1 Travel speed laden/unladen	km/h	18/18	18/18
	5.2 Lift speed laden/unladen	m/s	0.38/0.50	0.38/0.50
	5.3 Lowering speed laden/unladen	m/s	0.47/0.43	0.47/0.43
	5.6 Max. drawbar pull laden/unladen (S2 5 min) *2	N	20536/10623	0462/11871
	5.8 max. gradeability laden/unladen (S2 5 min) *2	%	28.1/23.8	26.6/24.5
	5.10 Service brake		Wet disc brake	Wet disc brake
Drive line	6.1 Drive motor rating (S2 60 min)	kW	2x7.8	2x7.8
	6.2 Lift motor rating (S3 15%)	kW	19,1	19,1
	6.3 Battery acc. to DIN43531/35/36		DIN 43531A	DIN 43531A
	6.4 Battery voltage, nominal capacity K	V/Ah	80/620	80/775
	6.5 Battery weight (min)	kg	1558	1863
Miscellaneous	8.1 Type of control		AC / Inverter	AC / Inverter
	8.2 Operating pressure for attachments	kg/cm²	140	140
	8.4 Sound level, driver's ear *3	dB (A)	73	73

*1 Further lift heights see upright table
*2 At friction coefficient μ=0.8 with 1.6 km/h
*3 acc. to DIN EN 12053

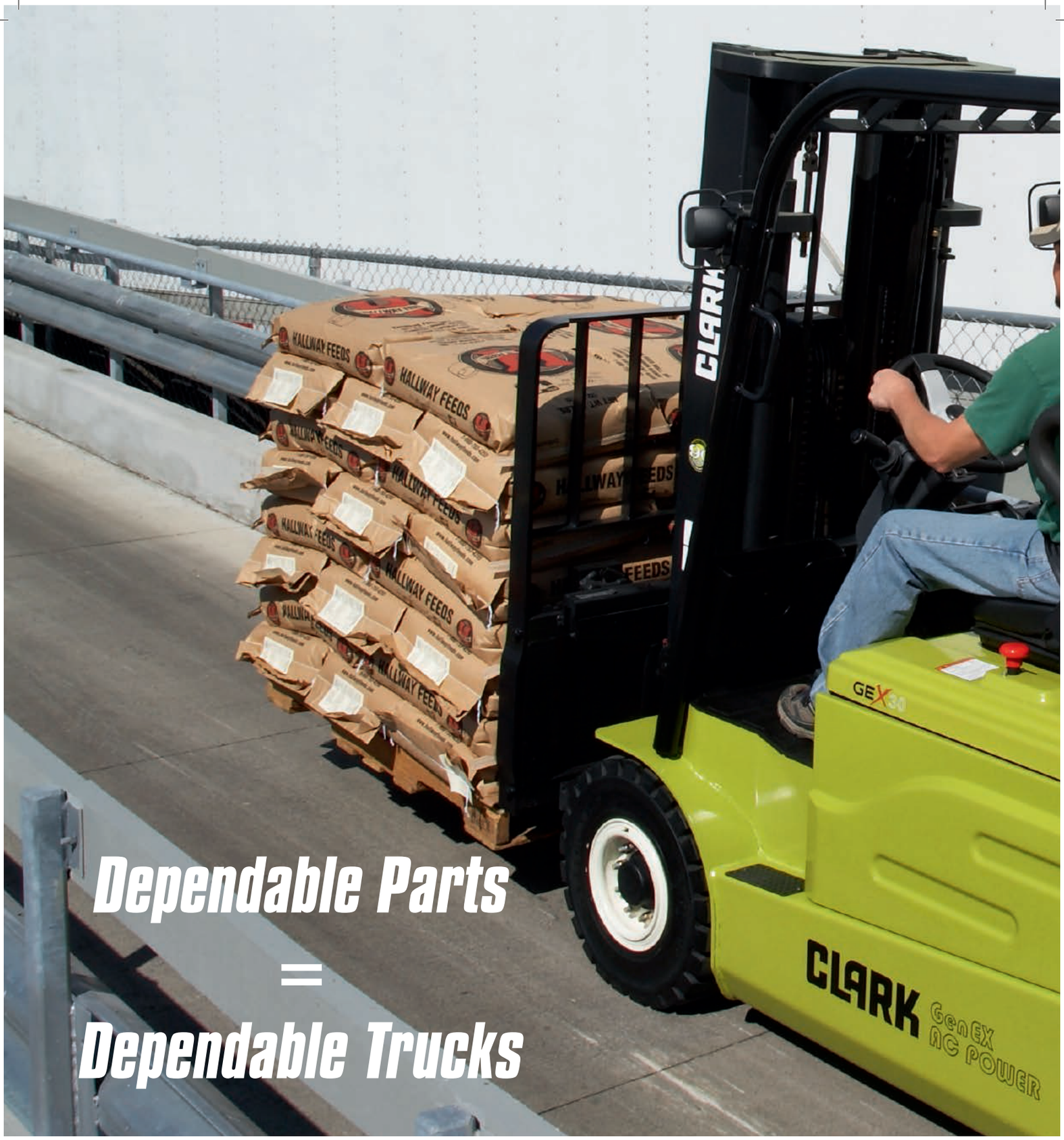

Dependable Parts = Dependable Trucks

- We don´t just build forklifts. As a company, we are also focused on providing our customers with the best possible technical service support and aftermarket parts available.

- **The CLARK PartsPRO® System** is our industry-leading electronic parts and service documentation tool that provides dealers with quick and accurate method of identifying parts for every CLARK forklift build since 1961. Parts Pro® ensures the availability of the most current technical information and has the unique capability to create parts manuals specific to your mixed CLARK fleet, making it simple

to positively identify and order the correct part(s) from your local CLARK dealer. The right CLARK part - The First Time, Every Time.

- Even though our business starts with a quality, cost effective product, our organization understands that it is the support and service that help keep your business running at peak efficiency.

CLARK

BUILT TO LAST

BUILT TO LAST.

CLARK INTERNATIONAL SOUTH PACIFIC
30 Salisbury Rd Hornsby NSW Australia 2077
PO Box 50 Hornsby NSW Australia 1630
T +61 9477 8444 F +61 9476 6558
cisp@clarkisp.com.au **www.clarkisp.com.au**

C20/C35
IC PNEUMATIC LPG/DIESEL - 2000 / 2500 / 3000 / 3500kg
IC-CUSHION LPG - 2000 / 2500 / 3000 / 3500kg